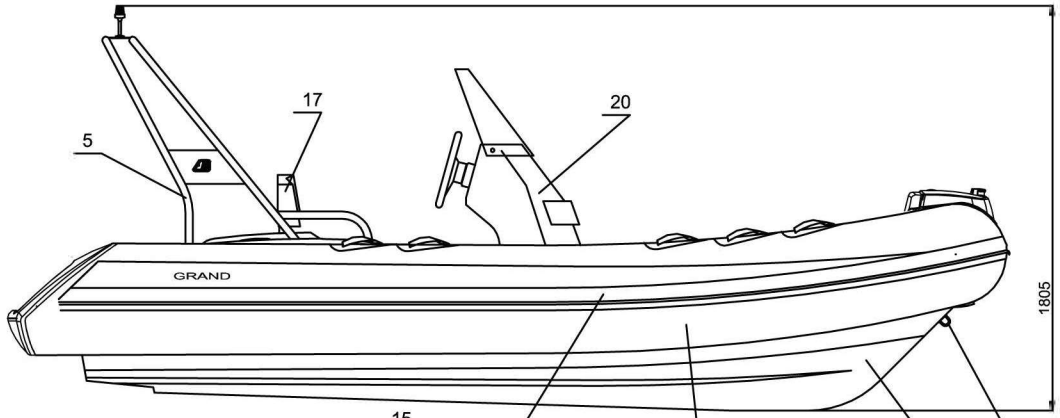

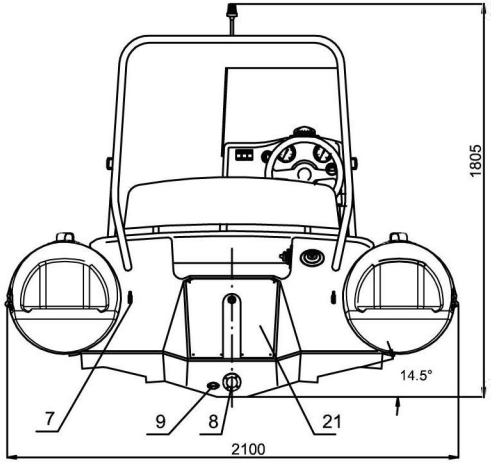

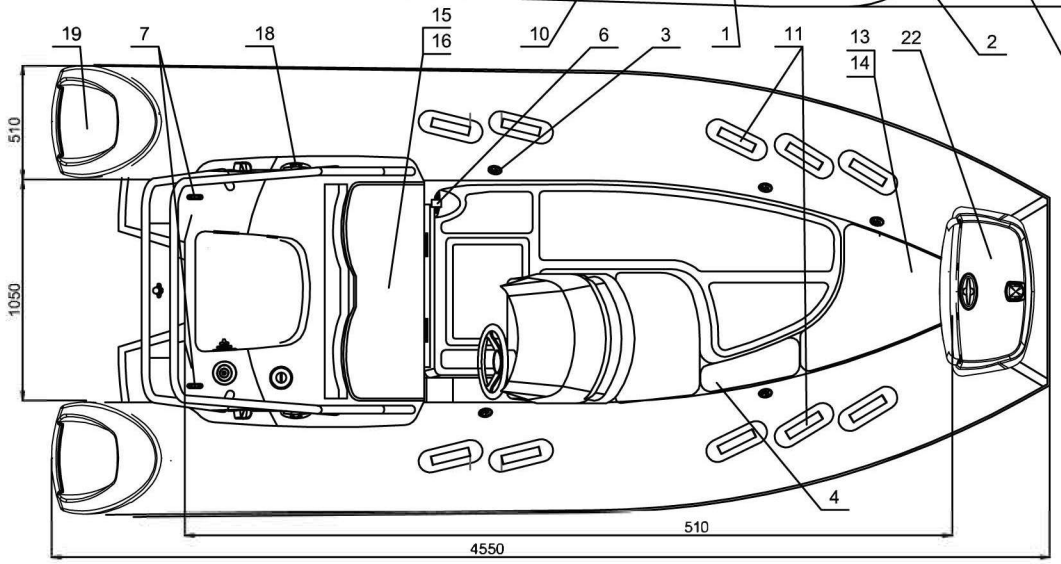

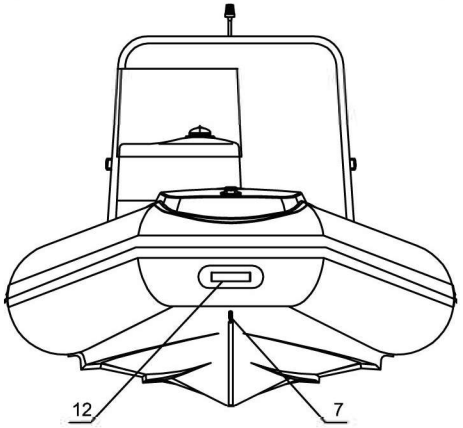

Item	Designation	Denomination	Qty	Remark
1	4223	Inflatable tube for G480F	1	
2	4321	Fiberglass hull for G480	1	
3	4139	Inflation-deflation valve BRAVO-2005	3	
4	4604	Bow side cushion for G480	1	
5	250301	St.steel arch, polished	1	
6	4440	Expanded drain plug 25mm	1	
7	4403	U-bolt M8x100	5	
8	4445	Drain valve 45x30	3	
9	4442	Drain through-hullwith plug	1	
10	4264	Rubbing strake, 100 mm	1	19,2 m
11	425002	PVC handlegrey / dark grey insertion	6	
12	4250	PVC handle grey / grey insertion	1	
13	4603	Bow locker removable cushion G480	1	
14	4652	Bow locker seat base for G480	1	
15	4613	Rear seat removable cushion G480	1	
16	4655	Rear seat base for G480 with hinges	1	
17	4622	Rear seat back G480	1	
18	4463	Pull -up cleat 6" 1/2", stainlesssteel	2	
19	2422	Fiberglass step ends G480	2	
20	2211	Steering console head for G480L	1	
21	4426	Motor plate extremal N7	1	
22	2407	Bow step plate N7	1	

DIMENSION (cm)		CAPACITY		TUBE	
Length overall	455	Passengers capacity	6	Tube diameter (cm)	450
Length internal	340	Max loading capacity (kg)	900	No of chambers	6
Width overall	210				
Width internal	105	Boat weight (kg)	250	Tube Volume (m*3)	1.65

Engine max (HP)	75
Engine recommended (HP)	50

UNLESS OTHERWISE SPECIFIED DIMENSIONS AND SCALE LIMITING SURFACE FINISH TOLERANCES LINEAR ANGULAR

FINISH

DO NOT SCALE DRAWING

REVISION

	NAME	SIGNATURE	DATE
DRAWN	Krapivin		
CHECK	Dmitryenko		
APPVD	Dzybenetkin		
MFG			
Q.A.			

MATERIAL

WEIGHT

Golden Line 480LF

1101

SCALE: 1:1

SHEET 1 OF 1