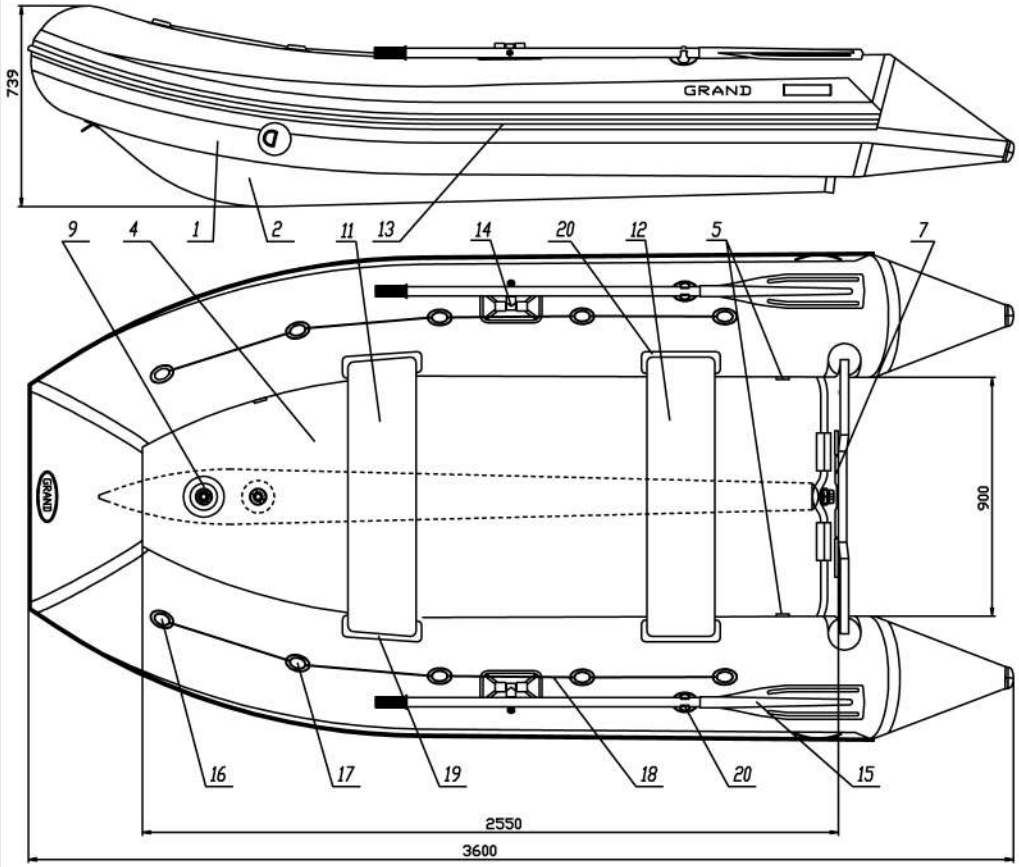

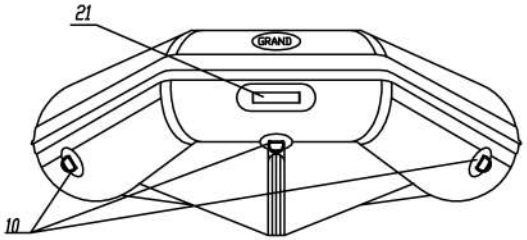

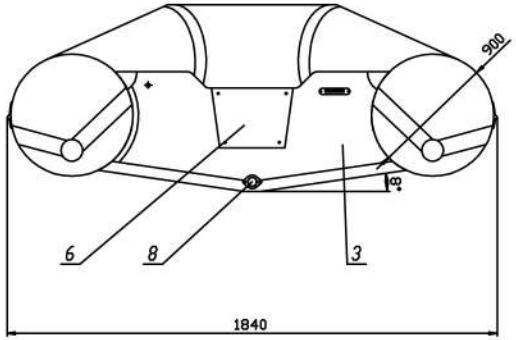

Item	Designation	Denomination	Q-ty	Remark
1	1270.01	Inflatable tube for C360	1	
2	1270.02	V-shape bottom	1	
3	1270.03	Integral marine grade ply transom	1	
4	4584	Airdeck	1	
5	4139	Inflation-deflation valve BRAVO-2005	3	
6	4422	Motor plate extremal N3	1	
7	4411	Motor plate intermal 270x98	1	
8	4448	Cockpit one way drain valve	1	
9	4593	Inflatable keel	1	
10	4259	Towing bow eye	3	
11	4511	Wooden seat N8 grey	1	
12	4513	Wooden seat N9 grey	1	
13	4264	Rubbing strake, 100 mm	1	
14	4262	Oarlockt	2	
15	4103	Oar 180 cm ith rivert	2	
16	4257	Lifeline holder (end)	4	
17	4258	Lifeline holder (middle)	6	
18	4266	Lifeline, D 10mm	2	
19	4255	Wooden seat holder N2	4	
20	4256	Oar holder	2	
21	4250	PVC handle grey / grey insertion	1	

DIMENSION (cm)		CAPASITY		TUBE	
Lenght overal	360	Passengers capasity	5	Tube diametr (cm)	46
Lenght inside	255	Max loading capacity (kg)	700	No of chambers	3+2
Wight overal	184				
Winght inside	90	Boat weight (kg)	42	Tube volume (m*3)	1.01
Engine max (HP)	30				
Engine recommended (HP)	20				

DO NOT SCALE DRAWING

REVISION

	NAME	DESCRIPTION	DATE
DRAWN	Kruglyak		
CHKD	Drobyazko		
APPD	Grebennikov		
MFG			
QA			

MATERIAL

WEIGHT

Corvette C360A

1271

SCALE 1:1

SHEET 1 OF 1

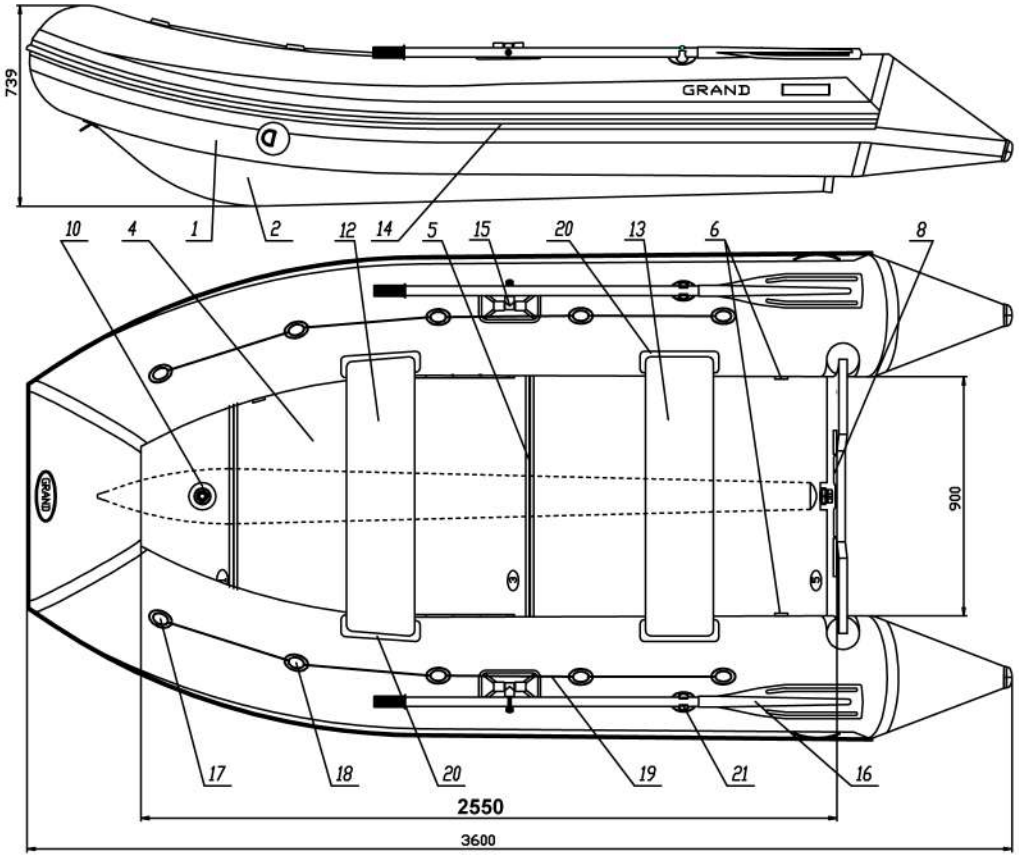

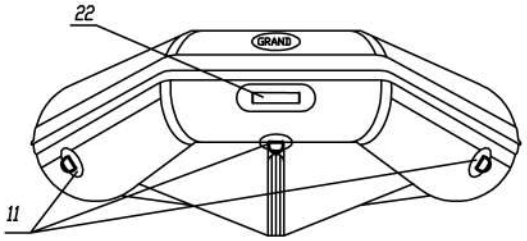

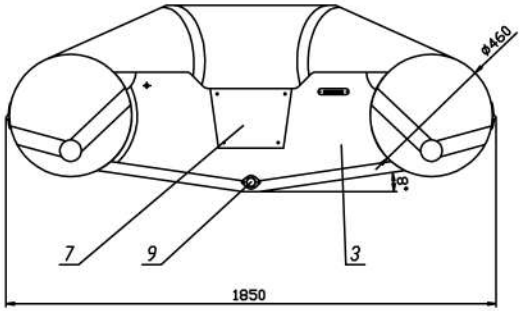

DIMENSION (cm)		CAPASITY		TUBE	
Lenght overal	360	Passengers capasity	5	Tube diametr (cm)	46
Lenght inside	255	Max loading capacity (kg)	700	No of chambers	3+1
Wight overal	184				
Winght inside	90	Boat weight (kg)	73	Tube volume (m*3)	1.01
Engine max (HP)	30				
Engine recommended (HP)	20				

Item	Item No	Description	Qty	Note
1		Inflatable tube for C360	1	
2		V-shape bottom for C360	1	
3		Integral marine grade ply transom for C360	1	
4	4564	Floorboards set for C360	1	
5	4574	Aluminium beams set for C360	1	
6	4139	Inflation-clefiation valve BRAVO-2005	3	
7	4422	Motor plate extremal N3	1	
8	4411	Motor plate intermal 270x98	1	
9	4448	Pull up drain valve	1	
10	4594	Inflatable keel for C360	1	
11	4259	Towing eye, PVC	3	
12	4511	Wooden seat N8 grey	1	
13	4513	Wooden seat N9 grey	1	
14	4264	Rubbing strake, 100 mm	1	
15	4262	Oarlockt	2	
16	4103	Oar 180 cm ith rivert	2	
17	4257	Lifeline holder (end)	4	
18	4258	Lifeline holder (middle)	6	
19	4266	Lifeline, D 10mm	2	
20	4255	Wooden seat holder N2	4	
21	4256	Oar holder	2	
22	4250	PVC handle grey / grey insertion	1	

	Name	Signature	Date
DRAWN	Kruglyak		
CHKD	Drobyazko		
APPVD	Grebennikov		
MFG			
Q.A			

DO NOT SCALE DRAWING

REVISION

Corvette C360

1270

MATERIAL

WEIGHT

SCALE: 1:1

SHEET 1 OF 1